Handouk

HL45

►FEATURES

- Multi contact arrangements: 2 Form C, 1NO+1NC,1NC+1NO
- Forcibly guided contacts according to EN50205
- 8A switching capability
- High insulation capacity(1.2/50μs):10kV surge voltage between coil & contacts and 6kV contact sets
- UL insulation system : Class F available
- Environmental friendly product (RoHS compliant)

c UL us

;

29mmx12.6mmx25.5mm

►CONTACT DATA

Contact arrangement		2 Form C, 1NO + 1NC, 1NC + 1NO
Forcibly guided contacts Type (according to EN50205)		Type A, Type B
Contact resistance[1)]		100mΩ max. (at 1A 6VDC)
Contact Material		$AgSnO_2$
Contact Ratings (Res.load)		6A 250VAC / 30VDC
Max. Switching Voltage		400VAC / 30VDC
Max. Switching Current		8A
Max. Switching Power		1,500VA / 180W
Life Expectancy	**Electrical endurance**[2)]	1×10^5 ops (1NO:6A 250VAC/30VDC, Resistive load at 70℃, 1s on 9s off) 5×10^4 ops (1NC:6A 250VAC/30VDC, Resistive load at 70℃, 1s on 9s off)
	Mechanical endurance	1×10^7 ops

Notes: 1) The data shown above are initial values.

2) Only 1 NO or NC is loaded in the test.

►CHARACTERISTICS

Insulation Resistance		1000M ohm min (at 500VDC)
Dielectric Strength	**Between open Contacts**	1,500VAC (For one minute)
	Between coil & Contacts	4,000VAC (For one minute)
	Between contact sets	3,000VAC (For one minute)
Surge voltage	**Between open Contacts**	2.5kV (1.2/50 μs)
	Between coil & Contacts	10kV (1.2/50 μs)
	Between contact sets	6.0kV (1.2/50 μs)
Operate time (at rated volt.)		15ms max.
Release Time (at rated volt.)		10ms max.
Temperature rise (at rated voltage)		≤60K(coil driving voltage:1.1times Un.Contact current carrying : rated current, at 75℃)

Shock resistance	**Functional**	NO:98m/s^2, NC:49m/s^2
	Destructive	980m/s^2
Vibration resistance		NO:10Hz to 55Hz 1.6mm DA, 55Hz to 200Hz, 98m/s^2 NC:10Hz to 55Hz 0.4mm DA
Creepage distance	**Between coil & contacts**	8mm
	Between contacts	5.5mm
Clearance distance	**Between coil & contacts**	8mm
	Between contacts	5.5mm
Ambient temperature		-40℃ to 85℃
Humidity		5% to 85% RH
Termination		PCB
Weight		Approx 20g
Construction		Plastic sealed

Notes: 1) The data shown above are initial values.

2) UL insulation system : Class F, Class B.

►COIL DATA

Coil power		Coil Power : 700mW		
Nominal Voltage (VDC)	**Pick-up Voltage VDC**	**Drop-out Voltage VDC**	**Max. 2) Allowable Voltage VDC**	**Coil Resistance at 23℃ (Ω)**
5	3.8	0.5	7.5	35.7 x (1±10%)
6	4.5	0.6	9	51 x (1±10%)
9	6.8	0.9	13.5	116 x (1±10%)
12	9	1.2	18	206 x (1±10%)
15	11.3	1.5	22.5	321 x (1±10%)
18	13.5	1.8	27	483 x (1±10%)
21	15.8	2.1	31.5	630 x (1±10%)
24	18	2.4	36	823 x (1±10%)
36	27	3.6	54	1,851 x (1±10%)
40	30	4.0	60	2,286 x (1±10%)
48 3)	36	4.8	72	3,291 x (1±15%)
60 3)	45	6.0	90	5,142 x (1±15%)
80 3)	64	8.0	120	9,143 x (1±15%)
110 3)	82.5	11.0	165	12,285 x (1±15%)

Notes: 1) The data shown above are initial values.

2) Maximum voltage refers to the maximum voltage which relay coil could endure in a short period of time.

3) For products with rated voltage ≥48V, measures should be taken to prevent coil overvoltage in order to protect coil in test and application (eg. Connect diodes in parallel).

►SAFETY APPROVAL RATINGS

UL&CUL	6A 250VAC / 277VAC / 30VDC at 70℃ NO: Pilot duty A300, at 70℃ NC: Pilot duty B300, at 70℃

Notes: 1) All values unspecified are room temperature. 2)Only typical loads are listed above.Other load specifications can be available upon request.

►ORDERING INFORMATION

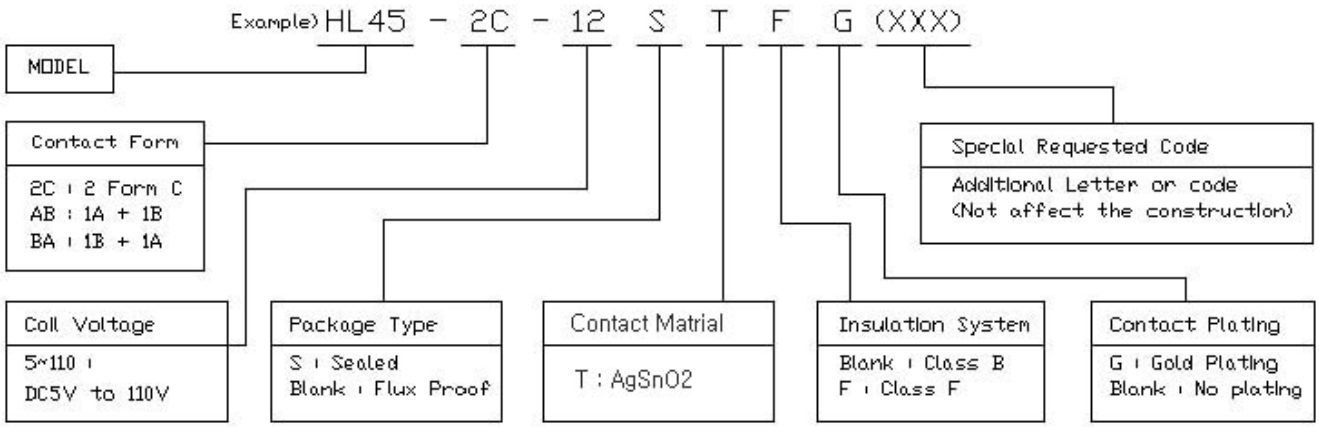

Notes: 1) If water cleaning is required after the relay is assembled on PCB, Please contact us for suggestion about suitable parts.
2) For gold plated type, the min. switching voltage is 10mA 5VDC. If customers have special requirement of load. Please contact us for suggestion about suitable parts.
3) The customer special requirement express at the last letter of part number a special code after evaluating by HANDOUK.

►DIMENSIONS (UNIT: MM)

2C : 2 From C

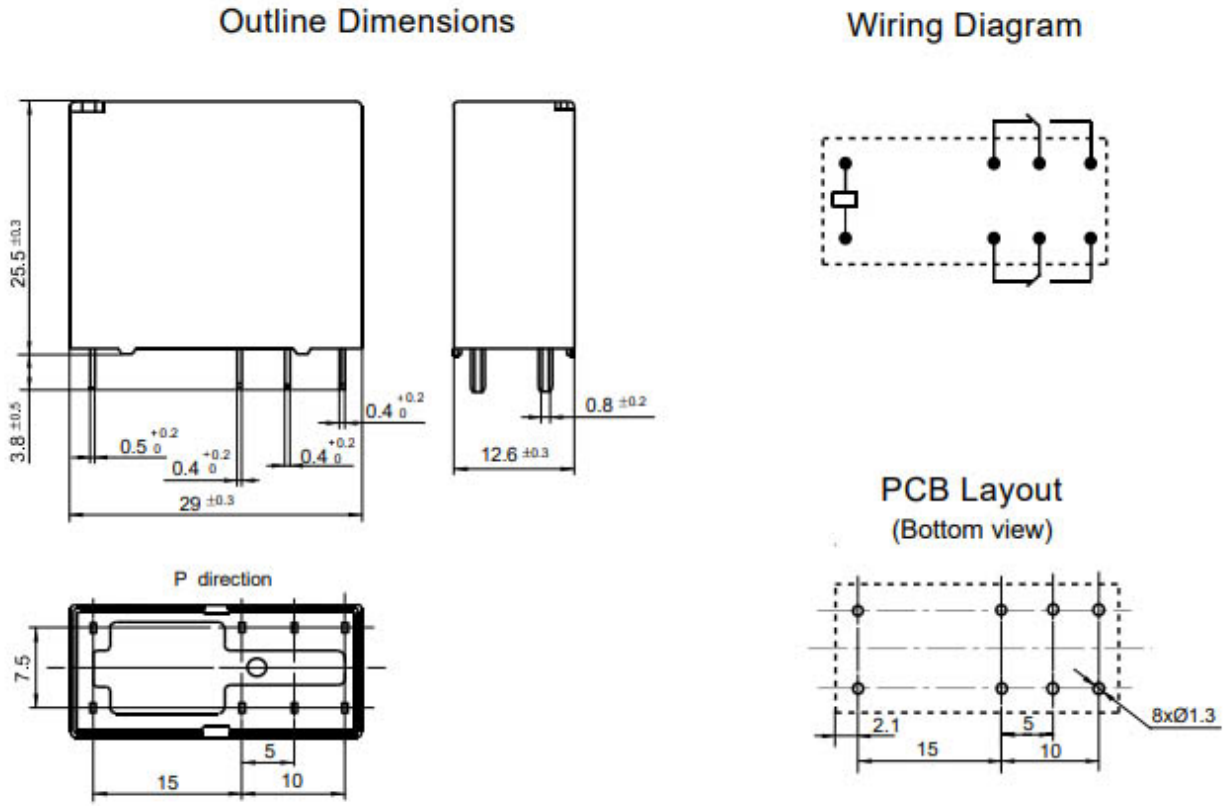

Remark: 1) In case of no tolerance shown in outline dimension: outline dimension ≤1mm,tolerance should be ±0.2mm; outline dimension>1mm and ≤5mm, tolerance should be ±0.3mm;outline dimension>5mm, tolerance should be ±0.4m
2) The tolerance without indicating for PCB layout is always ±0.1mm.

AB : 1 From A + 1 Form B

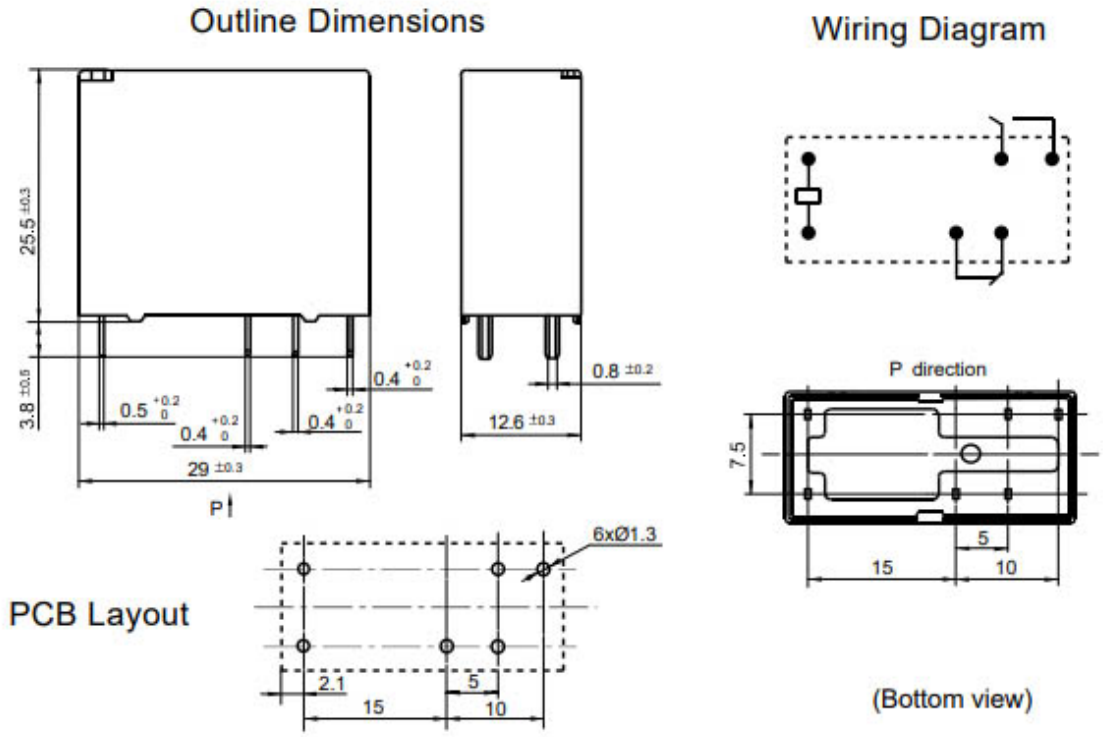

BA : 1 From B + 1 Form A

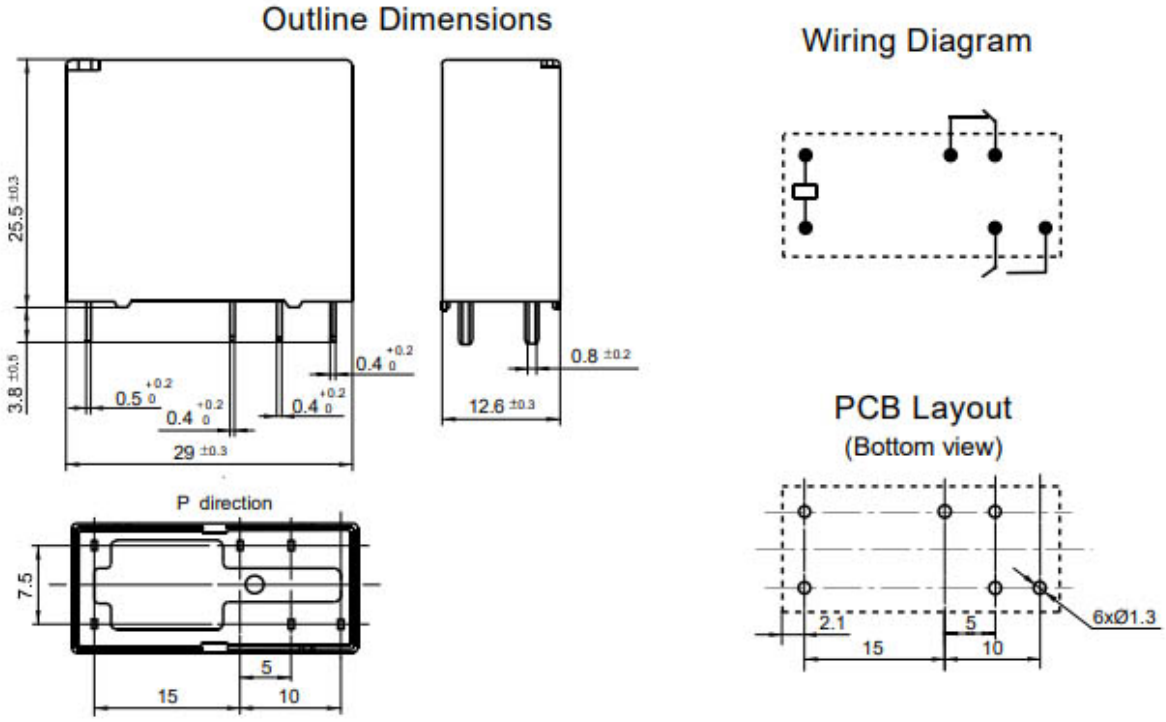

Remark: 1) In case of no tolerance shown in outline dimension: outline dimension ≤1mm,tolerance should be ±0.2mm; outline dimension>1mm and ≤5mm, tolerance should be ±0.3mm;outline dimension>5mm, tolerance should be ±0.4mm.
2) The tolerance without indicating for PCB layout is always ±0.1mm.

►RELAY SOCKETS

- The insulation resistance is 1,000MΩ
- Three mounting types are available : PCB, screw mounting and DIN rail mounting
- With finger protection device
- Many kinds of plug-in modules are available with the function of energizing indication and wiring protection.
- Environmental friendly product (RoHS compliant)

►CHARACTERISTICS

Type	Nominal Voltage	Nominal Current	Ambient Temperature	Dielectric Strength	Screw torque	Wire strip Length
HL-2C-A1	250VAC	10A	-40℃ to 70℃	5,000VAC		
HL-2C-C2	250VAC	10A	-40℃ to 70℃	5,000VAC	0.6N.m	7mm

►DIMENSIONS (UNIT: MM)

Socket	Outline Dimensions	Wiring Diagram/PCB Layout
PCB Terminal, PCB or Screw mounting	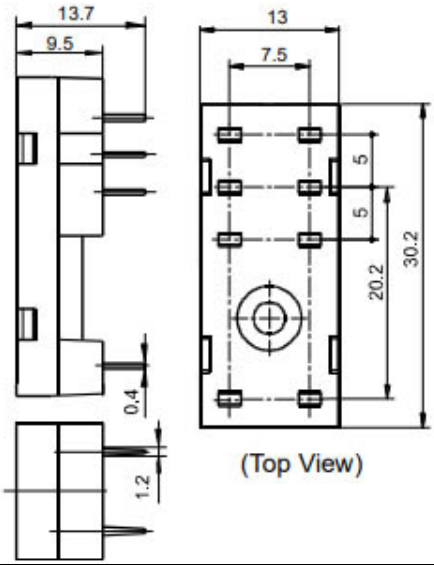	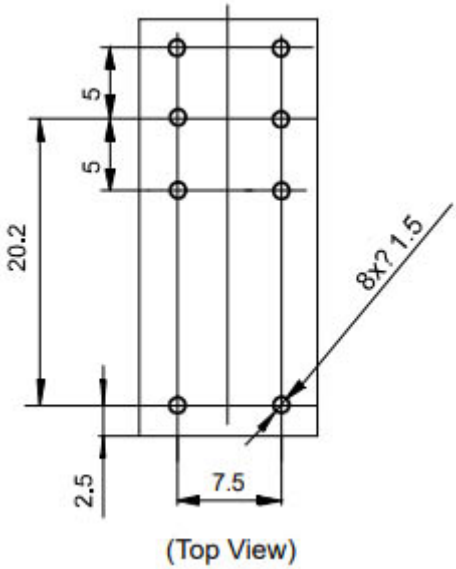

Screw Terminal
DIN rail or Screw mounting with finger protection device

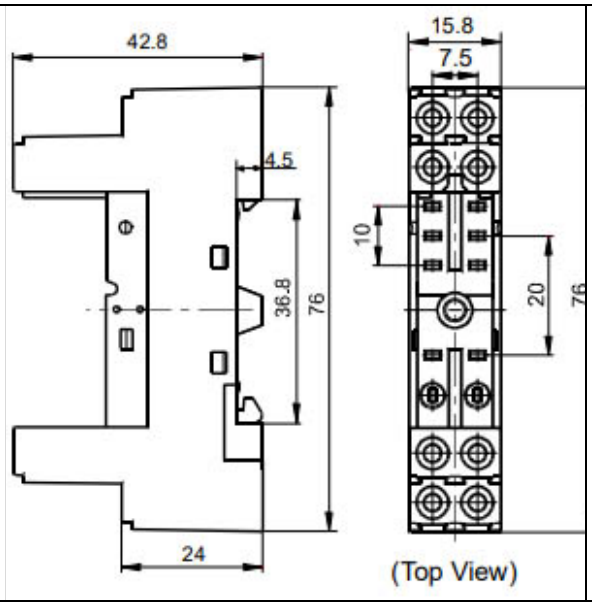

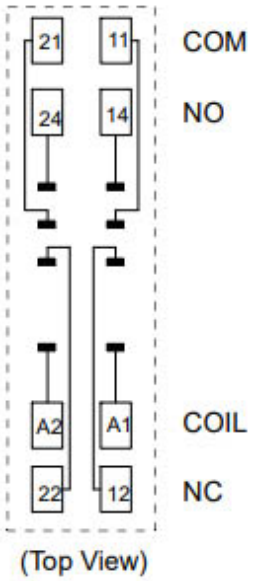

Notes: Please refer to the product data sheet if plug-in module is required.

Retainer

Metallic retainer

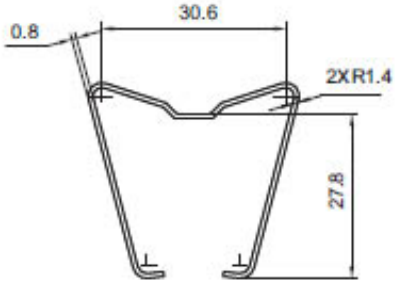

Plastic retainer

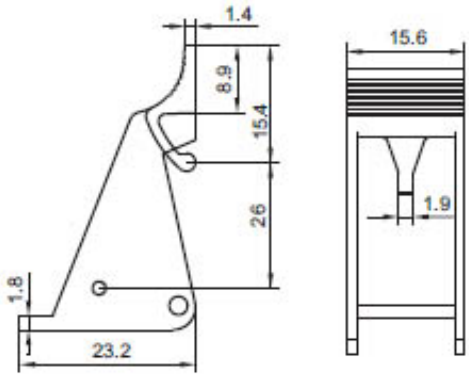

Marker

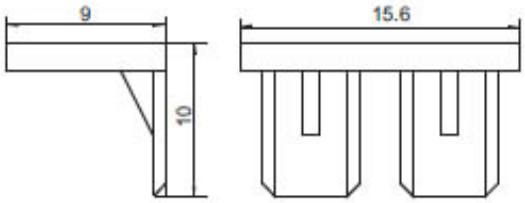

Disclaimer

This datasheet is for the customers' reference. All the specifications are subject to change without notice.

We could not evaluate all the performance and all the parameters for every possible application. Thus the user should be in a right position to choose the suitable product for their own application. If there is any query, please contact handouk for the technical service. However, it is the user's responsibility to determine which product should be used only.

►CHARACTERISTICS CURVE

LOAD BREAKING CAPACITY

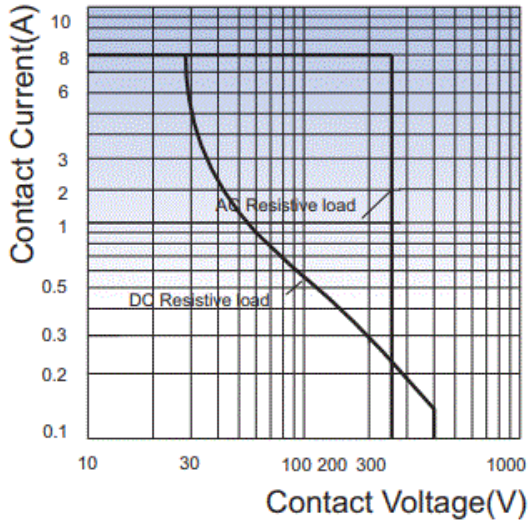

ELECTRICAL ENDURANCE

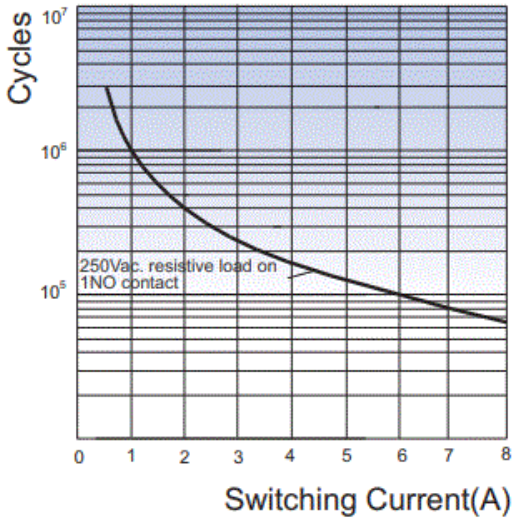

COIL TEMPERATUE RISE

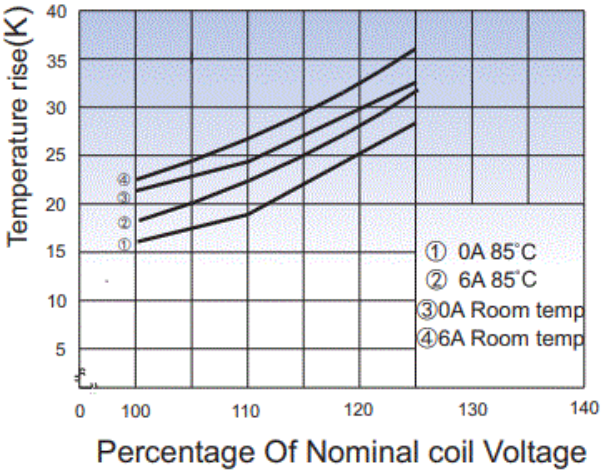

Test conditions:

1NO, Resistive load, 250VAC,
Room temp., 1s on 9s off.
The data shown above are typical values.